

BOTTOM VIEW

USB-C · sensor inlet

FRONT VIEW

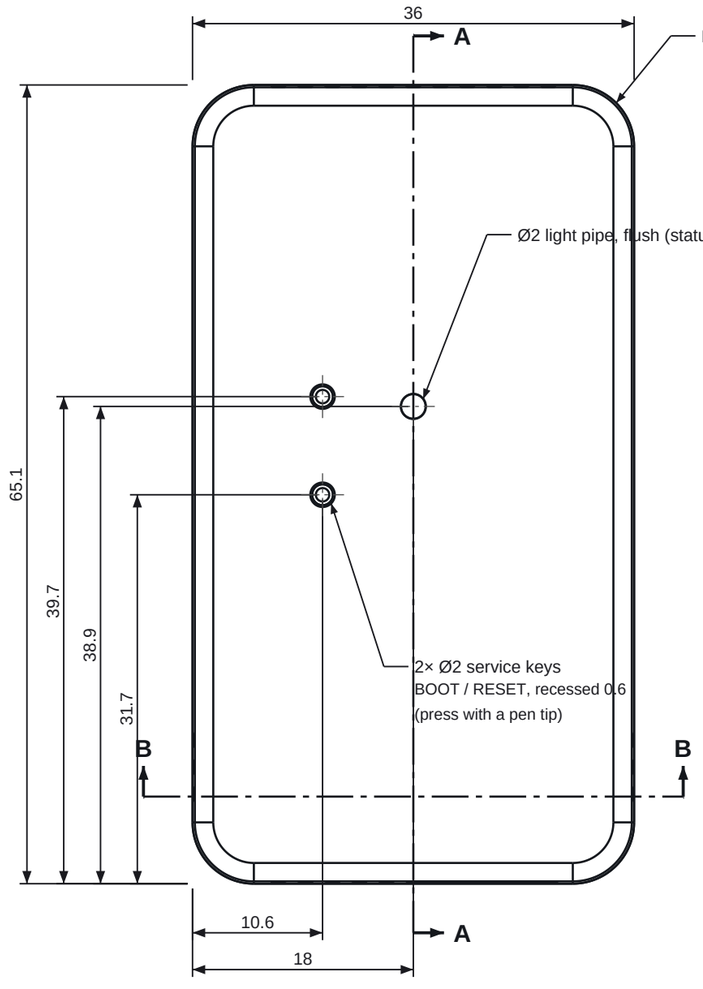

LEFT VIEW

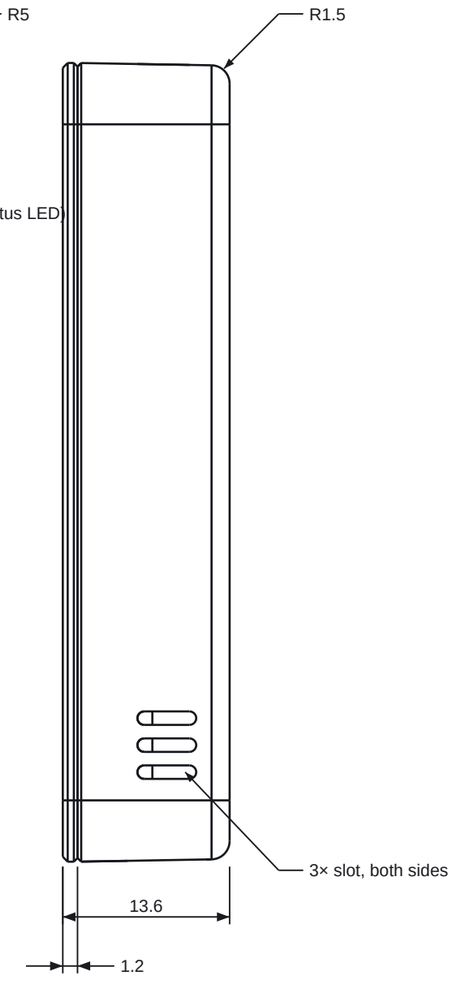

SECTION A–A

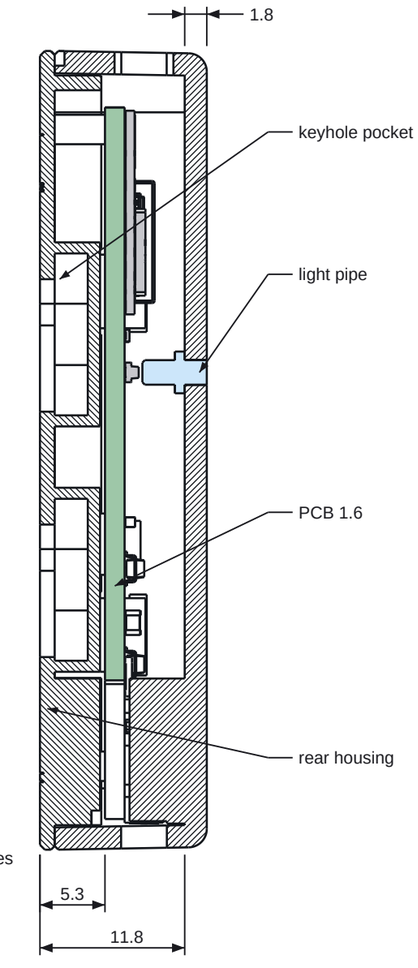

SECTION B–B (2.5:1) through the SHT41

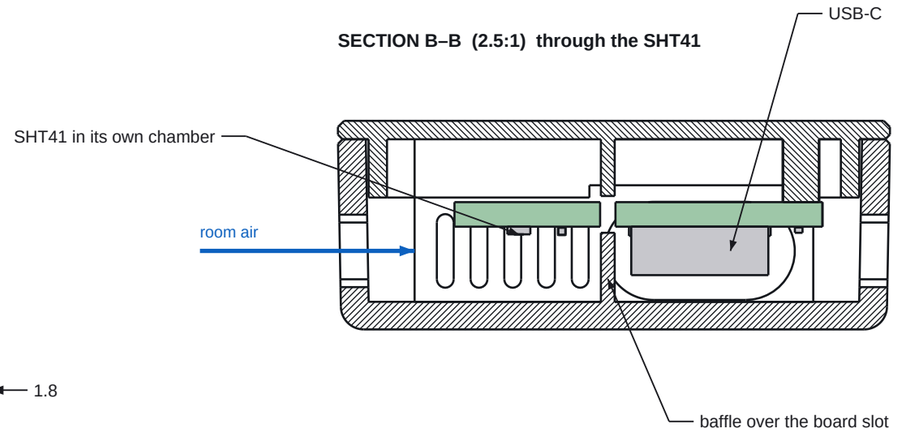



NOTES

1. Board PCB_Sensor rev A, 58 × 24 × 1.6 mm. Outline, slot, holes, USB-C, keys, LED, sensor and module positions come from PCB_Sensor.kicad_pcb (KiCad 8) – not measured by hand.
2. Hangs on two wall screws 20 mm apart (keyholes), or on a VHB pad on the flat back.
3. Front shell snaps onto the rear housing (4 fingers). To open: pull straight off.
4. SHT41 in a walled chamber over the board isolation slot with its own inlet slots; ESP32 / LDO heat rises to the top exhaust, away from the sensor.
5. J2 (UART header) is not fitted in the product build; USB-C is the programming port.
6. Shell draft 1° on all side walls; parting line 1.2 mm from the wall (shadow gap).
7. Fit check: ENV-1_fit_check_report.pdf (33 of 33 checks passed)

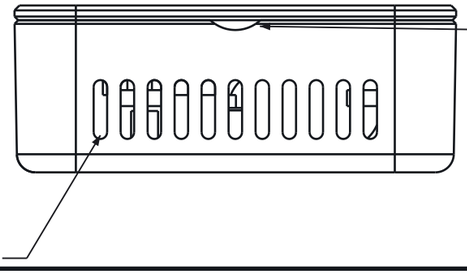

TOP VIEW

warm-air exhaust

TITLE

ENV-1 Environmental Sensor — General Arrangement

PART / ASSEMBLY		DRAWING No.	
ENV-1 assembly, wall-mounted		**ENV1-000**	
MATERIAL	DESIGNED	SCALE	SHEET
Housing PC/ABS · light pipe PC clear	AILA 2026-10-04	2:1 (section B–B 2.5:1)	1 / 4
GENERAL TOLERANCES	MASS	UNITS / PROJECTION	PRODUCT
ISO 2768-m · ISO 20457 TG5	13.4 g plastic + PCBA	mm	**ENV-1 · AILA**

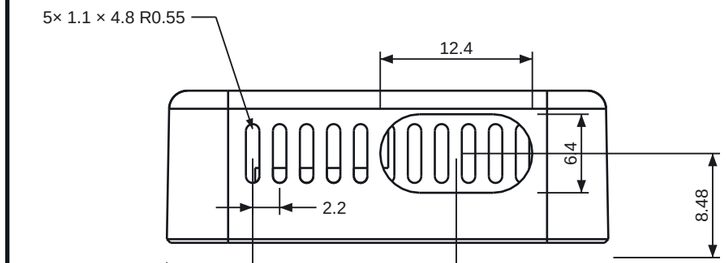

BOTTOM VIEW

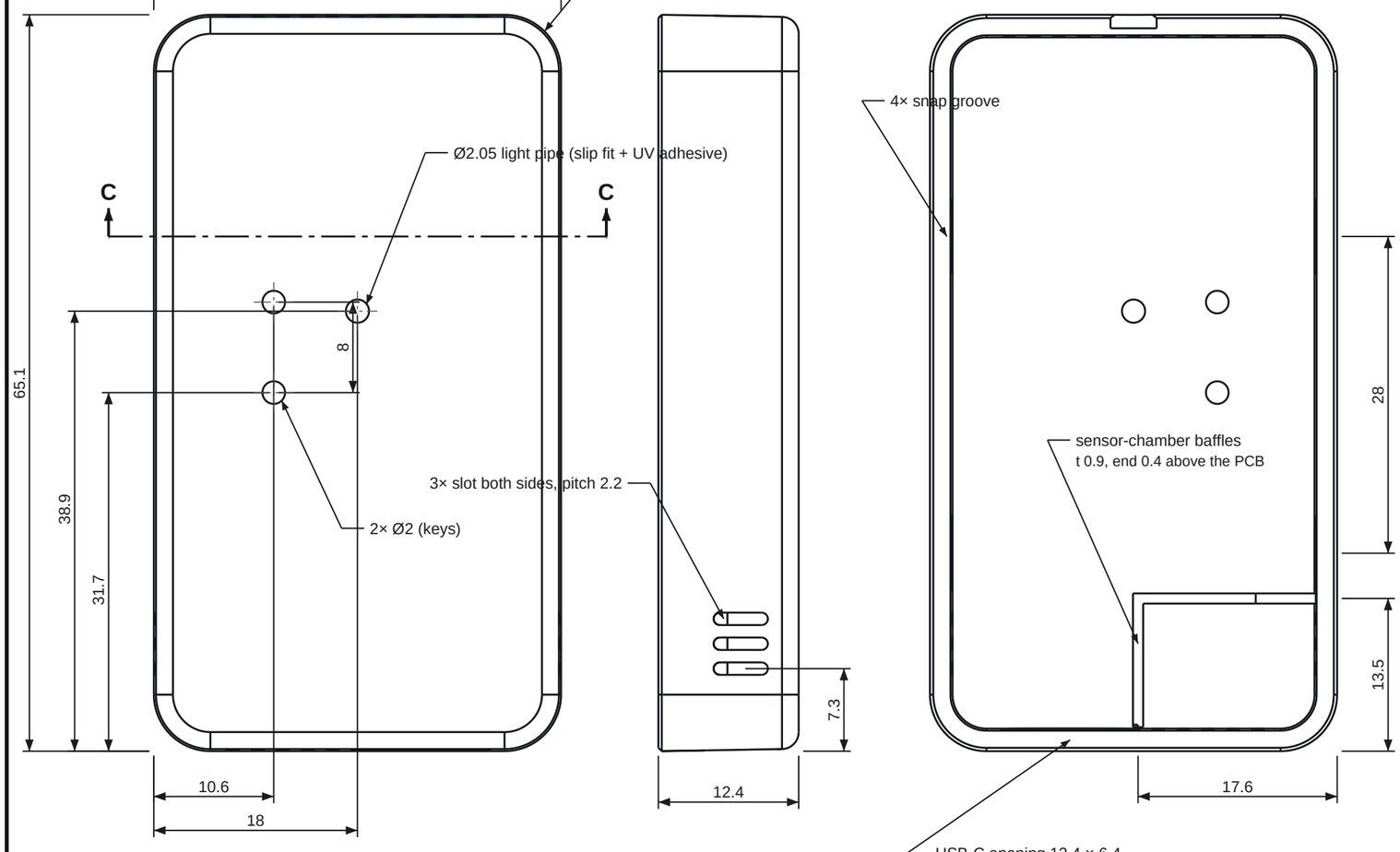

FRONT VIEW

LEFT VIEW

INSIDE VIEW (from the wall side)

SECTION C–C (3:1) through the snap grooves

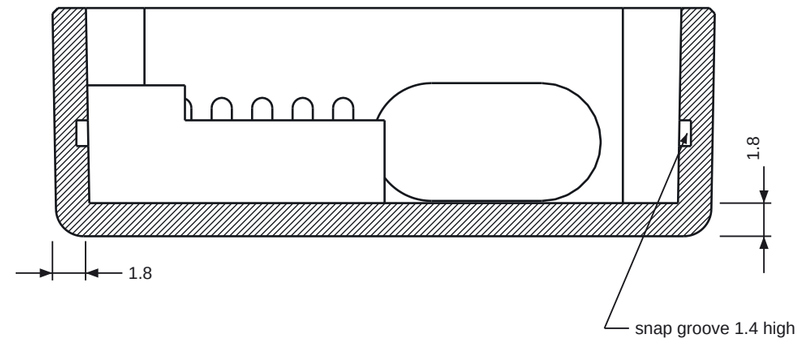

MANUFACTURING NOTES

Material	PC/ABS (e.g. Covestro Bayblend® T85 or equal), UL 94 HB min.
Colour	Arctic White (RAL 9016), exterior VDI 3400 Ref 24 matte, inside as moulded
Walls	1.8 nominal; draft 1° on all side walls (outside + inside)
Tooling	2-plate tool + 4 side actions (bottom: USB-C + inlet slots; left, right, top: vents) gate inside on the top wall; ejector pins on the baffles and inner rim only
Parting	at Z = 1.2 (chamfer 0.3 forms the shadow gap to the rear housing)
3D print	MJF PA12 / SLA: print front face down; FDM: 0.4 nozzle, front face down
Holes	light pipe Ø2.05 (slip fit, UV adhesive at the flange); keys Ø2.0, caps Ø1.7

TITLE: **ENV-1 Front Shell**			
PART / ASSEMBLY: ENV1-001 front shell		DRAWING No.: **ENV1-001**	
MATERIAL: PC/ABS Arctic White (RAL 9016)	DESIGNED: AILA 2026-10-04	SCALE: 2:1 (section C–C 3:1)	SHEET: 2 / 4
GENERAL TOLERANCES: ISO 2768-m · ISO 20457 TG5	MASS: 8.47 g	UNITS / PROJECTION: mm	PRODUCT: **ENV-1 · AILA**

SECTION E–E (3:1) through the snap fingers

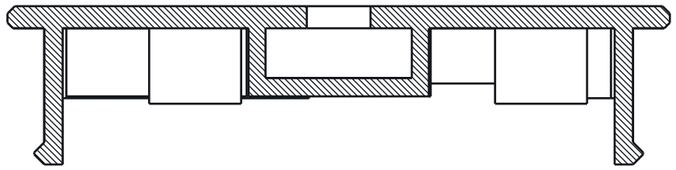

BACK VIEW (wall side)

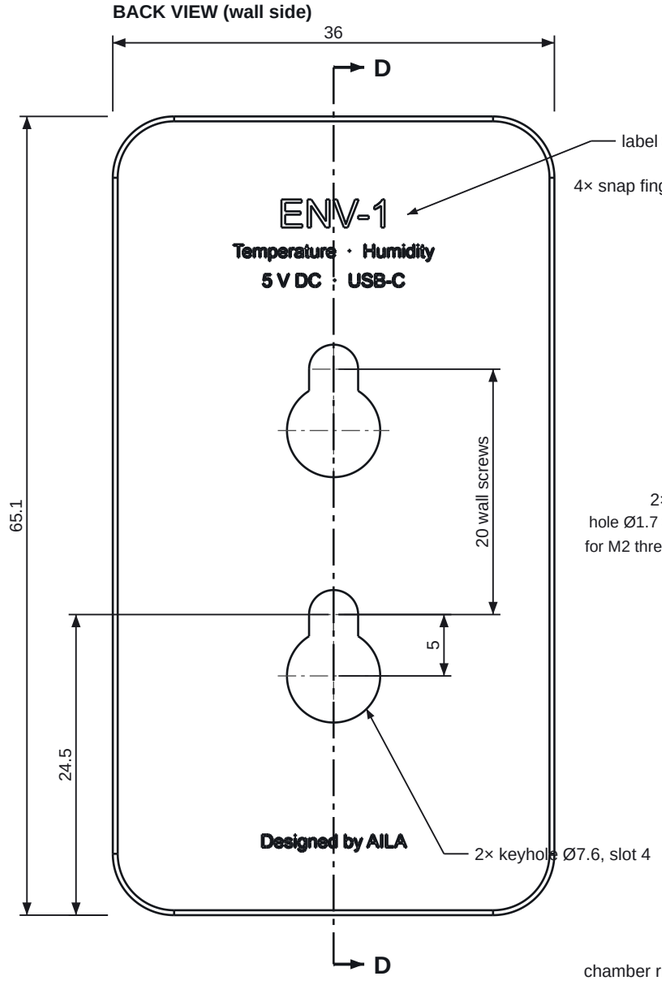

INSIDE VIEW (board side)

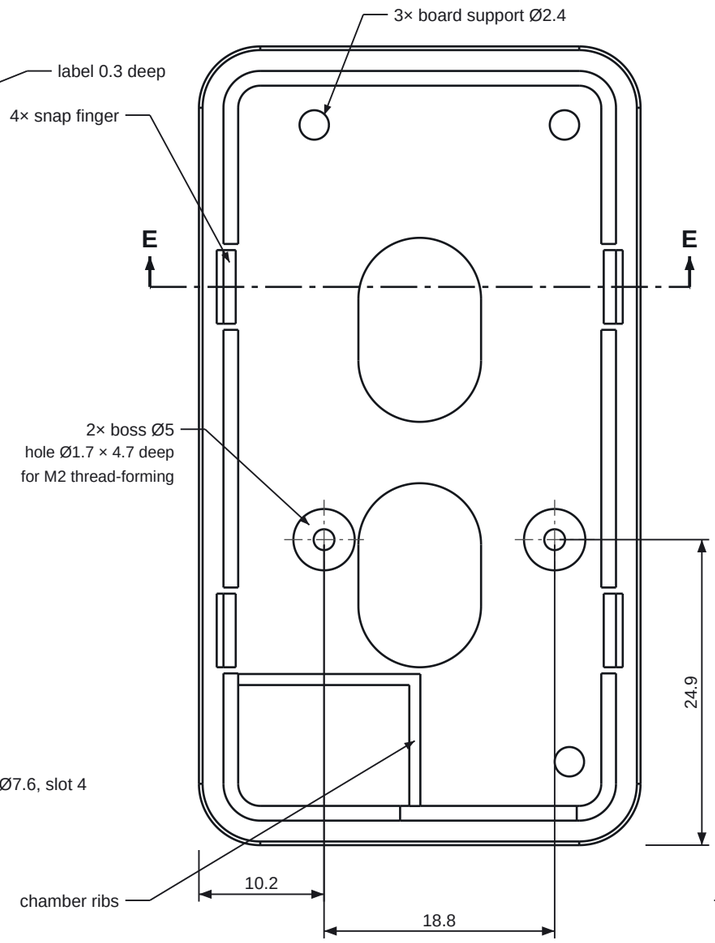

LEFT VIEW

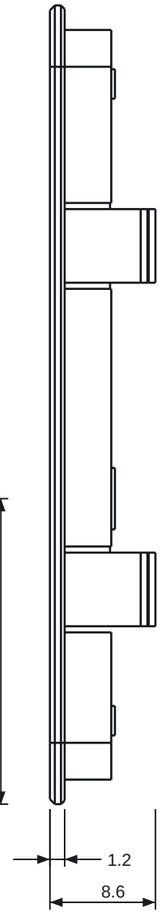

SECTION D–D

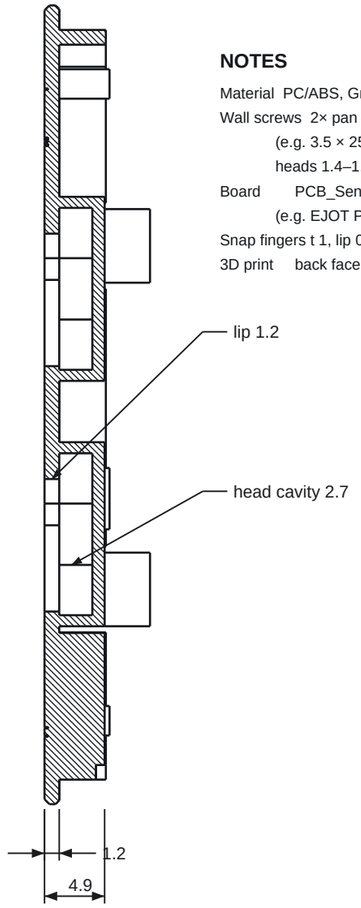

NOTES

Material PC/ABS, Graphite (RAL 7021), VDI 3400 Ref 24 outside
Wall screws 2× pan / round head, head Ø ≤ 7.2, head height ≤ 2.2, shank Ø 3.5–4 (e.g. 3.5 × 25 with plug). Drill 20 mm apart vertically; leave the heads 1.4–1.6 mm proud of the wall; hang and slide down 5 mm.
Board PCB_Sensor rev A on 2 bosses + 3 pads; 2× M2 × 6 thread-forming screws (e.g. EJOT PT® / Delta PT® K22×6), torque 0.2 N·m
Snap fingers t 1, lip 0.55, 45° lead-in, 45° release (strain 1.8 %)
3D print back face down on the bed; pockets and fingers need no supports

TITLE: **ENV-1 Rear Housing (wall plate + board carrier)**			
PART / ASSEMBLY: ENV1-002 rear housing		DRAWING No.: **ENV1-002**	
MATERIAL: PC/ABS Graphite (RAL 7021)	DESIGNED: AILA 2026-10-04	SCALE: 2:1 (section E–E 3:1)	SHEET: 3 / 4
GENERAL TOLERANCES: ISO 2768-m · ISO 20457 TG5	MASS: 4.82 g	UNITS / PROJECTION: mm	PRODUCT: **ENV-1 · AILA**

ENV1-003 LIGHT PIPE (PC clear, optical grade, polished ends)

Ø2.0 g6 in the Ø2.05 hole: slip fit, one dot of UV adhesive at the flange

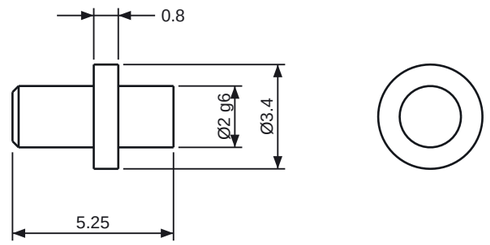

ENV1-004 KEY (2 per product: BOOT, RESET) PC/ABS Arctic White

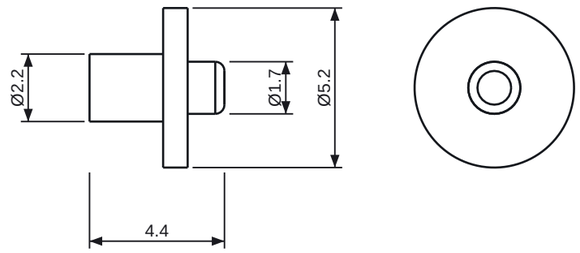

Key travel: 0.2 free gap, then the switch stroke. The key face sits 0.6 below the front face.



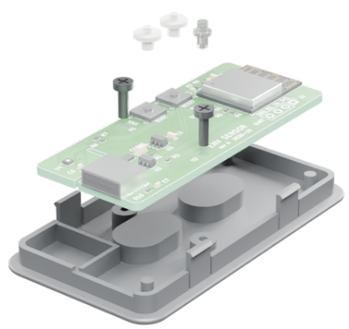

Exploded view: rear housing · board · screws · light pipe + keys · front shell

BILL OF MATERIALS

Item	Part	Qty	Material / spec	File
1	ENV1-001 front shell	1	PC/ABS Arctic White	ENV-1_front_shell.step / .stl
2	ENV1-002 rear housing	1	PC/ABS Graphite	ENV-1_rear_housing.step / .stl
3	ENV1-003 light pipe	1	PC clear (optical)	ENV-1_light_pipe.step / .stl
4	ENV1-004 key (BOOT, RESET)	2	PC/ABS Arctic White	ENV-1_key_boot / key_reset
5	Screw M2 × 6 thread-forming, pan head	2	steel zinc black	purchased
6	PCB_Sensor rev A, assembled (J2 not fitted)	1	see PCB_Sensor BOM	ENV-1_assembly.step
7	USB-C cable + 5 V supply	1	overmold ≤ 12.0 × 6.0 mm	purchased

ASSEMBLY

1 Insert the light pipe (3) from inside until the flange seats; one dot of UV adhesive.
2 Drop the two keys (4) into their holes from inside (flange towards the board).
3 Place the board (6) on the rear housing (2); fasten with 2 screws (5), 0.2 N·m.
4 Wall: drill 2 holes 20 mm apart (vertical), set the screws 1.4–1.6 mm proud, hang the rear housing and slide it down 5 mm.
5 Hold the front shell (1) square to the wall and press until the 4 snaps click.
6 Plug in USB-C from below. Open: pull the shell straight off at the top notch.

TITLE: **ENV-1 Light Pipe, Keys · BOM · Assembly**			
PART / ASSEMBLY: ENV1-003 light pipe · ENV1-004 keys		DRAWING No.: **ENV1-003/004**	
MATERIAL: see BOM	DESIGNED: AILA 2026-10-04	SCALE: 5:1 (parts)	SHEET: 4 / 4
GENERAL TOLERANCES: ISO 2768-m · ISO 20457 TG5	MASS: 0.03 g / 0.03 g	UNITS / PROJECTION: mm	PRODUCT: **ENV-1 · AILA**